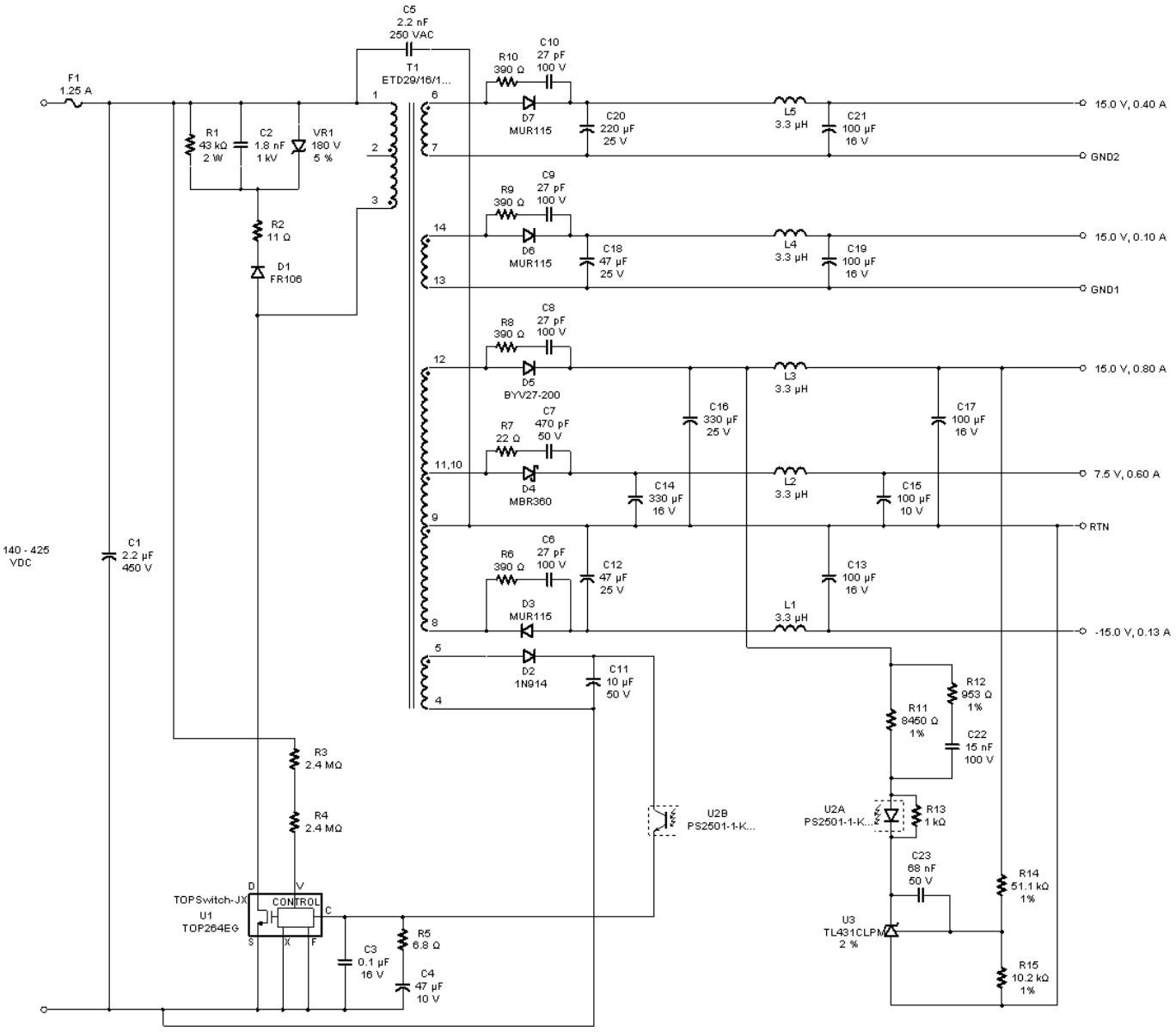
F1
1.25 A
C5
2.2 nF
250 VAC
T1
ETD29/16/1...
R1
43 kΩ
2 W
C2
1.8 nF
1 kV
VR1
180 V
5 %
R2
11 Ω
D1
FR106
140 - 425
VDC
C1
2.2 µF
450 V
R3
2.4 MΩ
R4
2.4 MΩ
TOPSwitch-JX
U1
TOP264EG
CONTROL
D
V
C
S
X
F
C3
0.1 µF
16 V
R5
6.8 Ω
C4
47 µF
10 V
R10
390 Ω
C10
27 pF
100 V
D7
MUR115
C20
220 µF
25 V
L5
3.3 µH
C21
100 µF
16 V
15.0 V, 0.40 A
GND2
R9
390 Ω
C9
27 pF
100 V
D6
MUR115
C18
47 µF
25 V
L4
3.3 µH
C19
100 µF
16 V
15.0 V, 0.10 A
GND1
R8
390 Ω
C8
27 pF
100 V
D5
BYV27-200
L3
3.3 µH
C16
330 µF
25 V
C17
100 µF
16 V
15.0 V, 0.80 A
R7
22 Ω
C7
470 pF
50 V
D4
MBR360
C14
330 µF
16 V
L2
3.3 µH
C15
100 µF
10 V
7.5 V, 0.60 A
RTN
R6
390 Ω
C6
27 pF
100 V
D3
MUR115
C12
47 µF
25 V
C13
100 µF
16 V
L1
3.3 µH
-15.0 V, 0.13 A
D2
1N914
C11
10 µF
50 V
U2B
PS2501-1-K...
R11
8450 Ω
1%
R12
953 Ω
1%
C22
15 nF
100 V
U2A
PS2501-1-K...
R13
1 kΩ
C23
68 nF
50 V
U3
TL431CLPM
2 %
R14
51.1 kΩ
1%
R15
10.2 kΩ
1%